Cat, CATERPILLAR their respective logos ACERT and “Caterpillar Yellow”, as well as corporate and product identity used herein, are trademarks of Caterpillar and may not be used without permission.

For more complete information on CAT products, dealer services, and industry solutions, visit us on the web at:
www.cat.com and at **www.forestpro.com**

©2006 Caterpillar
All Rights Reserved
Printed in the USA
AEXQ0075-01

Materials and specifications are subject to change without notice. Featured machines in photos may include additional equipment. See your Caterpillar dealer for available options.

CAT®
Forest Products

535C/545C Wheel Skidder Specs

www.forestpro.com

CAT®

WSK

C-Series

535C/545C Wheel Skidder Advancements

New Cat® C7 ACERT™ Engine meets EPA Tier 3 emissions regulations and uses a proven system that has been tested and validated.

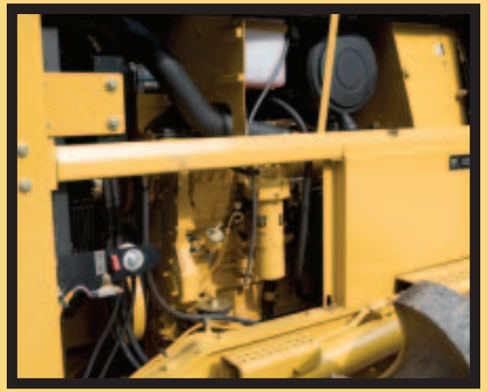

MORE Comfort…

Operator Station

- Ergonomic improvements like relocation of the dozer control and governor pedal will improve operator comfort and reduce operator fatigue
- New display cluster, similar to Cat® T-Series Track-Type Tractors, allows for easy monitoring of machine operation

MORE Uptime…

Serviceability/Reliability

- Redesign of engine enclosures allows for easier and faster daily maintenance
- New environmentally friendly ecology drains on all fluid compartments make changing the fluid easier, reducing down time
- ToughGuard™ abrasion resistant hoses inside the grapple, arch, boom and across the hitch are more durable allowing them to last longer
- Hoses located across the hitch area are easier to access reducing maintenance time
- Cat designed and manufactured structures combined with existing proven powertrain components maximize performance

MORE Profit…

New Cat® C7 ACERT™ Engine

- New Cat® C7 ACERT™ engine provides extended 500 hour service intervals and delivers proven fuel efficiency, lowering owning and operating costs

New Caterpillar Grapples

- Wear resistant cast tips and tong redesign allows for increased loading performance and maximum log retention, increasing grapple productivity

535C

Although the work horse in larger timber stands is the 545C, the 535C is no stranger to this type of work load. With 218 gross horsepower (1800 rpm), a weight of 39, 780 lbs (18044 kg) and 139.1 inch (3533 mm) wheel base, this forestry mid-size skidder can do it all. Engineered for reliability and durability, 535C provides maximize performance and productivity.

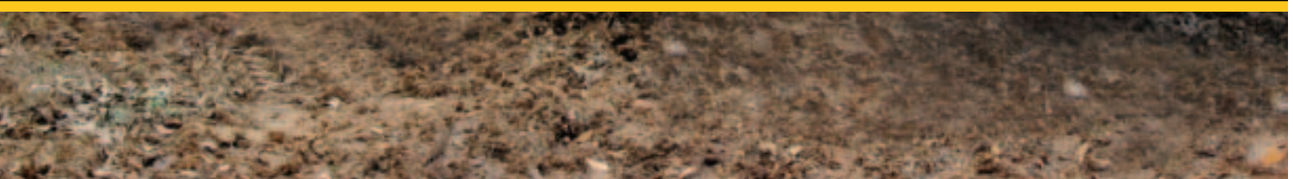

CAT Forest Products

ForestPro™ Consulting Services

535C Skidder Specifications

www.forestpro.com

Engine

Engine Model	Cat C7 with ACERT ™ Technology	
Gross Power - SAE J1995	162 kW	218 hp
Net Power - ISO 9249	152 kW	204 hp
Net Power - SAE J1349	152 kW	204 hp
Displacement	7.2L	439 in^3
Bore	110 mm	4.33 in
Stroke	127 mm	5 in
Derating Altitude	3,000 M	9843 ft
Air Cleaner	Radial Sealed	
Alternator	80 amp	
Fan Type	Blower	
Electrical System	24V	
Battery - Quantity	2	
Battery - Volts	12V	
Battery - Capacity	950 CCA	
Starting System	Direct electric	

Axles

Front	Heavy duty planetary final drive, Oscillating +/-15°
Rear	Heavy duty planetary final drive, Fixed rear
Differentials	Hydraulic locking, engage on the go

• These ratings apply at 1,800 rpm when tested under the specified standard conditions.

• Net power advertised is the power available at the flywheel when the engine is equipped with fan, air cleaner, muffler and alternator. No derating required up to 3,000M (9,843 ft) altitude.

• Based on standard air conditions of 25° (77°F) and 99 kPa (29.32" Hg) dry barometer. Used 35° API gravity fuel having an LHV of 42,780 KJ/kg (18,390 BTU/lb) when used at 30°C (86°F) [ref. A fuel density of 838.9 g/L (7.001 lb/gal)].

Transmission

Travel Speed - Fwd. 1st	6.4 kph	4 mph
Travel Speed - Fwd. 2nd	9 kph	5.6 mph
Travel Speed - Fwd. 3rd	10.9 kph	6.8 mph
Travel Speed - Fwd. 4th	15.3 kph	9.5 mph
Travel Speed - Fwd. 5th	27.5 kph	17.1 mph
Travel Speed - Rev. 1st	6.2 kph	3.9 mph
Travel Speed - Rev. 2nd	10.5 kph	6.5 mph
Travel Speed - Rev. 3rd	18.6 kph	11.6 mph
Max Drawbar Pull	190.1 kN	42,733 lb
Torque Converter - Type	Lock-up clutch	
Transmission	5 fwd / 3 rev countershaft, powershift	
Transmission Cooler Type	Plate	

Brakes

Brakes - Service Type	Enclosed wet disc each wheel, full hydraulic
Brakes - Parking Type	Spring applied, hydraulic released, Electro-hydraulic controlled

Hydraulic System

Circuit Type	Closed center, variable flow	
Pump Type	Axial piston	
Pump Output	174 L/min	46 gal/min
Relief Valve Setting	21,000 kPa	3,045 psi
Steering Valve	Direct link, non-follow	
Dozer Valve	Electro-hydraulic	
Grapple Valve	4 or 5 stack, pilot	

• Measured at 2200 RPM

Steering

Frame articulation	+/- 45 degrees

Variable flow-modulated 1/4 turn steering

For more complete information on CAT products, dealer services, and industry solutions, visit us on the web at:
www.cat.com and at **www.forestpro.com**

Forest Products

ForestPro™ Consulting Services

535C Skidder Specifications

www.forestpro.com

Winch

Grapple Applications

Type	Hydraulic controlled	
Max Line Pull - Bare Drum	175 kN	39,342 lb
Max Line Speed	40.2 M/min	132 ft/min
Drum Capacity 19.0mm (3/4in)	47 M	154 ft
Drum Capacity 22.2mm (7/8in)	30 M	97 ft
Drum Capacity 25.4mm (1in)	28 M	91 ft
Drum Diameter	229 mm	9 in
Drum Width	279 mm	11 in

Cable Applications

Type	Mechanical, hydraulic controlled	
Max Line Pull - Bare Drum	197.5 kN	44,400 lb
Max Line Speed	110 M/min	360 ft/min
Drum Capacity 19.0mm (3/4in)	45 M	148 ft
Drum Capacity 22.2mm (7/8in)	32 M	105 ft
Drum Capacity 25.4mm (1in)	25 M	82 ft
Drum Diameter	254	10 in
Drum Width	279 mm	11 in

Service Refill

Fuel Tank	315 L	83.2 gal
Cooling System	56.7 L	15 gal
Differential & Final Drives - Front	52 L	13.7 gal
Differential & Final Drives - Rear	52 L	13.7 gal
Engine Oil	27 L	7.1 gal
Transmission & Torque Converter	54 L	14.2 gal
Hydraulic Winch	6.6 L	1.7 gal
Mechanical Winch	24.5 L	6.5 gal
Hydraulic System - Tank	54 L	14.3 gal
Hydraulic System - Total	112 L	29.6 gal

Weights

Est Operating Weight*	18,044 kg	39,780 lb

*Operating weight includes enclosed cab, 30.5 tires, decking blade, arch, bunching grapple, winch

For more complete information on CAT products, dealer services, and industry solutions, visit us on the web at: **www.cat.com** and at **www.forestpro.com**

Dimensions

All dimensions are approximate

Grapple

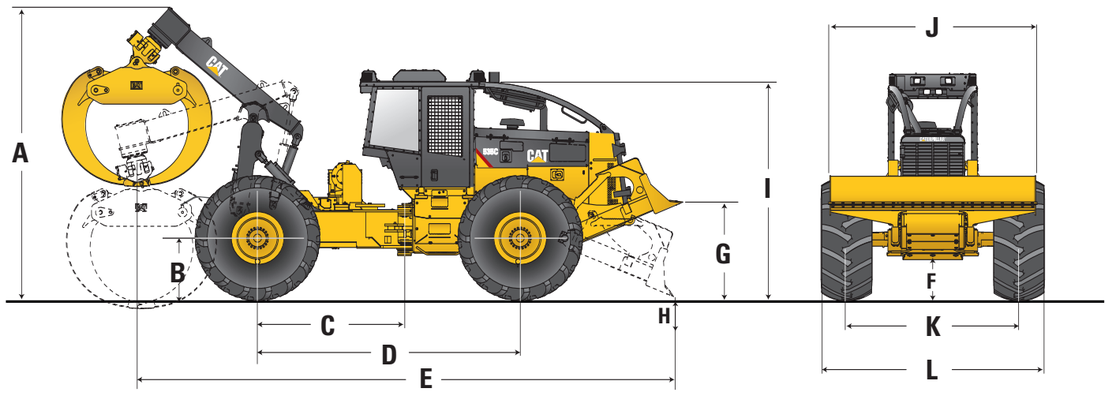

Dimension	
A Ground level to top boom (grapple)	
standard boom	4103 mm (161.5 in)
extended boom	4304 mm (169.4 in)
A1 Ground level to top roller (cable)	2794 mm (110 in)
B Ground level to axle center line*	843 mm (33.2 in)
C Rear axle center line to pin	1798 mm (70.8 in)
D Wheel base	3534 mm (139.2 in)
E Overall length (grapple)	
standard boom	7626 mm (300.2 in)
extended boom	7514 mm (295.8 in)
E1 Overall length (cable)	6945 mm (273.4 in)
F Ground clearance	533 mm (21 in)
G Decking blade lift height	1381 mm (54.4 in)
H Decking blade dig depth	456 mm (17.9 in)
I Height to top of cab†	3184 mm (125.4 in)
J Decking blade width	3138 mm (123.5 in)
K Tread width	2622 mm (103.2 in)
L Overall width	3398 mm (133.8 in)
Turning radius over tires*	6000 mm (236.2 in)

*With 30.5 x 32 tires

†Add 188 mm (7.4 in) if equipped with optional lights or water tank

Cable

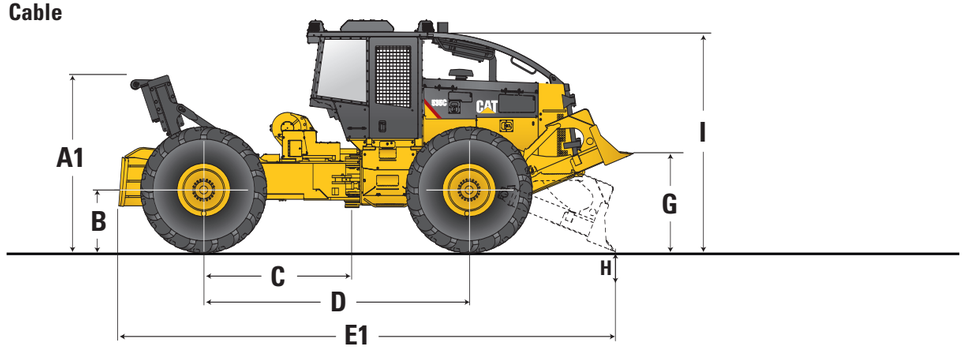

535C Grapple — Continuous Rotation

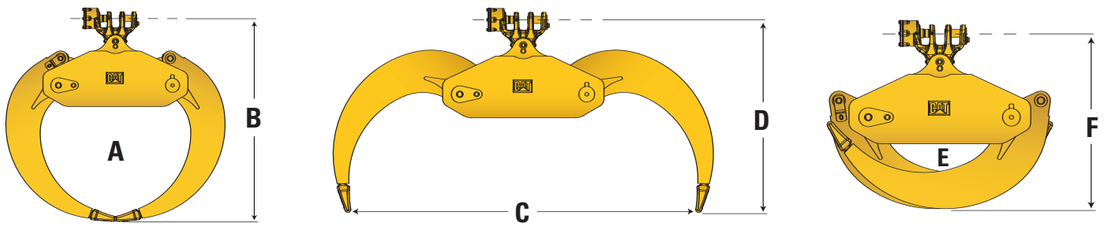

	Bunching	Thinning*
A Grapple capacity	1.34 m^2 (14.4 ft^2)	1.54 m^2 (16.6 ft^2)
B Tip to tip height	1981 mm (78 in)	2108 mm (83 in)
C Tong opening	3124 mm (123 in)	3226 mm (127 in)
D Full open height	1832 mm (72.1 in)	1905 mm (75 in)
E Minimum stem diameter	190 mm (7.5 in)	183 mm (7.2 in)
F Fully closed height	1371 mm (54 in)	1371 mm (54 in)

*Thinning grapple is intended only for use in thinning applications

535C Arches

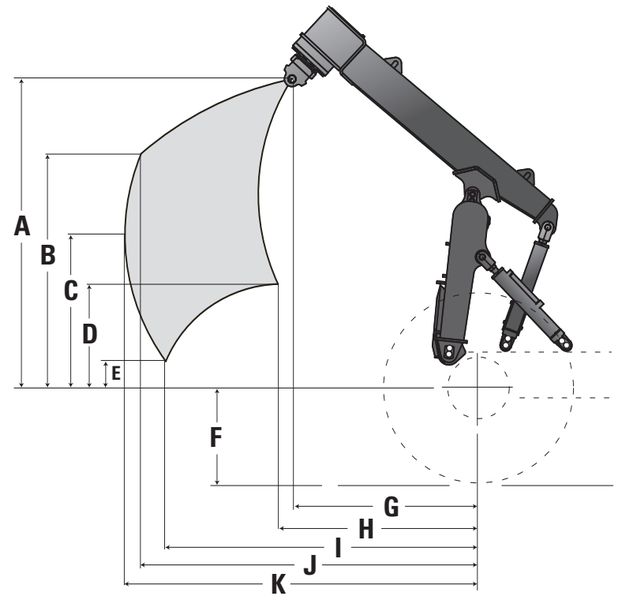

Dual Function

	Standard Boom	Extended Boom
A Lift highest, retracted	2623 mm (103.3 in)	2847 mm (112.1 in)
B Lift highest, farthest	1944 mm (76.5 in)	2192 mm (86.3 in)
C Lift maximum reach	1336 mm (52.6 in)	1336 mm (52.6 in)
D Lift lowest, retracted	752 mm (29.6 in)	764 mm (30.1 in)
E Lift lowest, farthest	259 mm (10.2 in)	286 mm (11.3 in)
F Loaded tire radius*	843 mm (33.2 in)	843 mm (33.2 in)
G Reach highest, retracted	1513 mm (59.6 in)	1546 mm (60.9 in)
H Reach lowest, retracted	1469 mm (57.8 in)	1666 mm (65.6 in)
I Reach lowest, farthest	2488 mm (98 in)	2706 mm (106.5 in)
J Reach highest, farthest	2765 mm (108.9 in)	2825 mm (111.2 in)
K Reach maximum	2880 mm (113.4 in)	3037 mm (119.6 in)

*With 30.5 x 32 tires

For more complete information on CAT products, dealer services, and industry solutions, visit us on the web at:
www.cat.com and at **www.forestpro.com**

545C

The 545C is the largest machine offered in the Caterpillar skidder family, and is used in skidding applications around the world. With 232 gross horsepower (1800 rpm), a weight of 42,325 lbs (19198 kg) and a 155 inch (3937 mm) wheel base, the 545C has the power, stability and durability to get the job done in large timber stands....and now with the new redesigned Caterpillar grapples, this skidder will be able to maximize its loads, even in the roughest terrain.

CAT Forest Products

ForestPro™ Consulting Services

545C Skidder Specifications

www.forestpro.com

Engine

Engine Model	Cat C7 with ACERT™ Technology	
Gross Power - SAE J1995	173 kW	232 hp
Net Power - ISO 9249	163 kW	219 hp
Net Power - SAE J1349	163 kW	219 hp
Displacement	7.2L	439 in^3
Bore	110 mm	4.33 in
Stroke	127 mm	5 in
Derating Altitude	3,000 M	9843 ft
Air Cleaner	Radial Sealed	
Alternator	80 amp	
Fan Type	Blower	
Electrical System	24V	
Battery - Quantity	2	
Battery - Volts	12V	
Battery - Capacity	950 CCA	
Starting System	Direct electric	

Axles

Front	Heavy duty planetary final drive, Oscillating +/-15°
Rear	Heavy duty planetary final drive, Fixed rear
Differentials	Hydraulic locking, engage on the go

- These ratings apply at 1,800 rpm when tested under the specified standard conditions.
- Net power advertised is the power available at the flywheel when the engine is equipped with fan, air cleaner, muffler and alternator. No derating required up to 3,000M (9,843 ft) altitude.
- Based on standard air conditions of 25° (77°F) and 99 kPa (29.32" Hg) dry barometer. Used 35° API gravity fuel having an LHV of 42,780 KJ/kg (18,390 BTU/lb) when used at 30°C (86°F) [ref. A fuel density of 838.9 g/L (7.001 lb/gal)].

Transmission

Travel Speed - Fwd. 1st	6.4 kph	4 mph
Travel Speed - Fwd. 2nd	9 kph	5.6 mph
Travel Speed - Fwd. 3rd	10.9 kph	6.8 mph
Travel Speed - Fwd. 4th	15.3 kph	9.5 mph
Travel Speed - Fwd. 5th	27.5 kph	17.1 mph
Travel Speed - Rev. 1st	6.2 kph	3.9 mph
Travel Speed - Rev. 2nd	10.5 kph	6.5 mph
Travel Speed - Rev. 3rd	18.6 kph	11.6 mph
Max Drawbar Pull	197.0 kN	44,293 lb
Torque Converter - Type	Lock-up clutch	
Transmission	5 fwd / 3 rev countershaft, powershift	
Transmission Cooler Type	Plate	

Brakes

Brakes - Service Type	Enclosed wet disc each wheel, full hydraulic
Brakes - Parking Type	Spring applied, hydraulic released, Electro-hydraulic controlled

Hydraulic System

Circuit Type	Closed center, variable flow	
Pump Type	Axial piston	
Pump Output	190 L/min	50 gal/min
Relief Valve Setting	21,000 kPa	3,045 psi
Steering Valve	Direct link, non-follow	
Dozer Valve	Electro-hydraulic	
Grapple Valve	4 or 5 stack, pilot	

- Measured at 2200 RPM

Steering

Frame articulation	+/- 45 degrees

Variable flow-modulated 1/4 turn steering

For more complete information on CAT products, dealer services, and industry solutions, visit us on the web at:
www.cat.com and at **www.forestpro.com**

CAT

Forest Products

ForestPro™ Consulting Services

545C Skidder Specifications

www.forestpro.com

Winch

Grapple Applications

Type	Hydraulic controlled	
Max Line Pull - Bare Drum	175 kN	39,342 lb
Max Line Speed	40.2 M/min	132 ft/min
Drum Capacity 19.0mm (3/4in)	47 M	154 ft
Drum Capacity 22.2mm (7/8in)	30 M	97 ft
Drum Capacity 25.4mm (1in)	28 M	91 ft
Drum Diameter	229 mm	9 in
Drum Width	279 mm	11 in

Cable Applications

Type	Mechanical, hydraulic controlled	
Max Line Pull - Bare Drum	204 kN	45,850 lb
Max Line Speed	110 M/min	360 ft/min
Drum Capacity 19.0mm (3/4in)	45 M	148 ft
Drum Capacity 22.2mm (7/8in)	32 M	105 ft
Drum Capacity 25.4mm (1in)	25 M	82 ft
Drum Diameter	254	10 in
Drum Width	279 mm	11 in

Service Refill

Fuel Tank	378 L	99.8 gal
Cooling System	56.7 L	15 gal
Differential & Final Drives - Front	52 L	13.7 gal
Differential & Final Drives - Rear	74 L	19.5 gal
Engine Oil	27 L	7.1 gal
Transmission & Torque Converter	54 L	14.2 gal
Hydraulic Winch	6.6 L	1.7 gal
Mechanical Winch	24.5 L	6.5 gal
Hydraulic System - Tank	54 L	14.3 gal
Hydraulic System - Total	112 L	29.6 gal

Weights

Est Operating Weight*	19,198 kg	42,325 lb

*Operating weight includes enclosed cab, 30.5 tires, decking blade,arch, bunching grapple, winch

For more complete information on CAT products, dealer services, and industry solutions, visit us on the web at: **www.cat.com** and at **www.forestpro.com**

Dimensions

All dimensions are approximate

Grapple

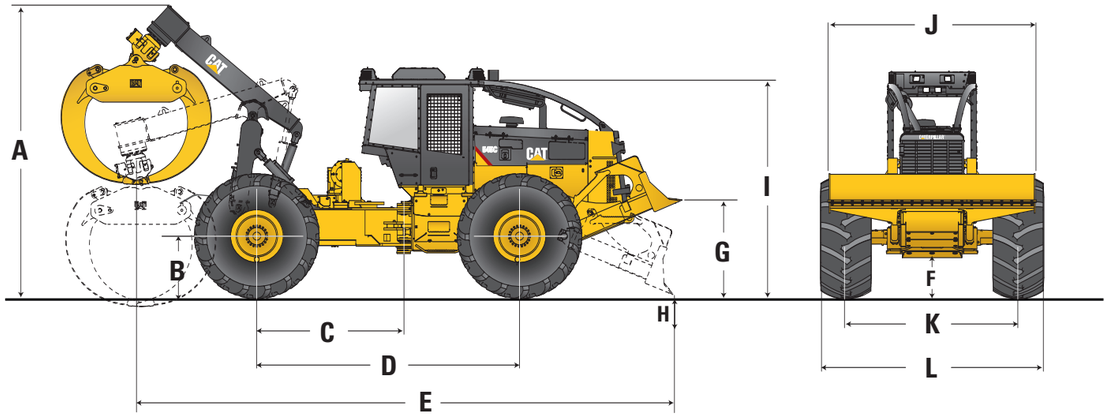

Dimension	
A Ground level to top boom (grapple)	4302 mm (169.4 in)
A1 Ground level to top roller (cable)	2771 mm (109 in)
B Ground level to axle center line*	843 mm (33.2 in)
C Rear axle center line to pin	2203 mm (86.7 in)
D Wheel base	3939 mm (155.1 in)
E Overall length (grapple)	8028 mm (316 in)
E1 Overall length (cable)	7514 mm (295.8 in)
F Ground clearance	533 mm (21 in)
G Decking blade lift height	1381 mm (54.4 in)
H Decking blade dig depth	456 mm (17.9 in)
I Height to top of cab†	3184.4 mm (125.4 in)
J Decking blade width	3138 mm (123.5 in)
K Tread width	2622 mm (103.2 in)
L Overall width	3398 mm (133.8 in)
Turning radius over tires*	6400 mm (252 in)

*With 30.5 x 32 tires
†Add 188 mm (7.4 in) if equipped with optional lights or water tank

Cable

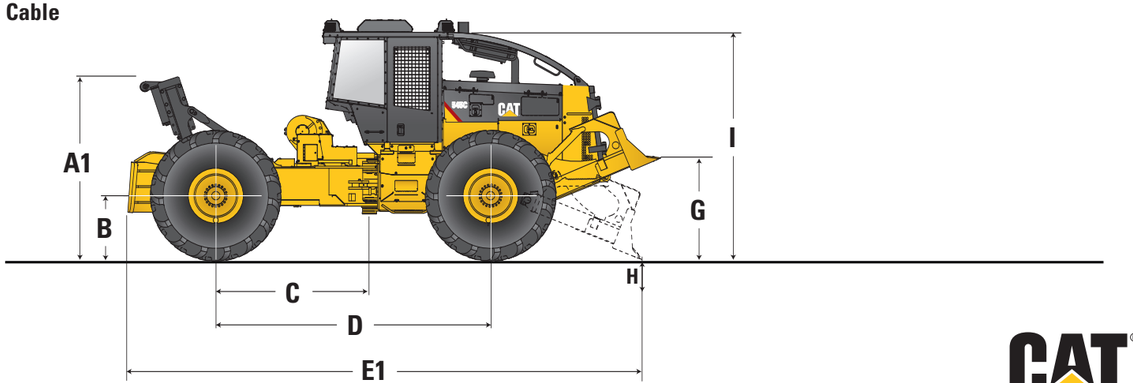

545C Grapple — Continuous Rotation

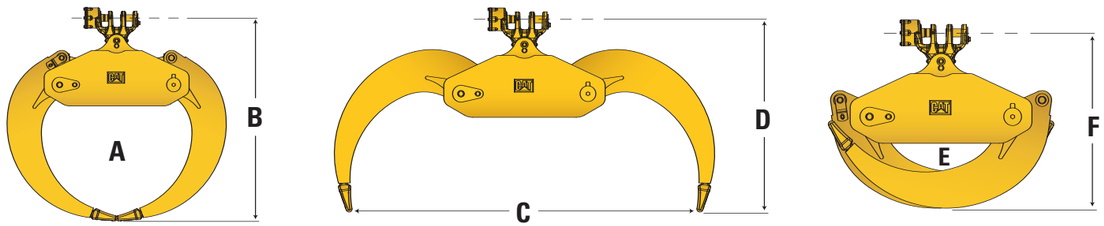

	Bunching	Thinning*
A Grapple capacity	1.54 m^2 (16.6 ft^2)	1.78 m^2 (19 ft^2)
B Tip to tip height	2108 mm (83 in)	2159 mm (85 in)
C Tong opening	3226 mm (127 in)	3429 mm (135 in)
D Full open height	1905 mm (75 in)	1880 mm (74 in)
E Minimum stem diameter	183 mm (7.2 in)	241 mm (9.5 in)
F Fully closed height	1371 mm (54 in)	1473 mm (58 in)

*Thinning grapple is intended only for use in thinning applications

545C Arch

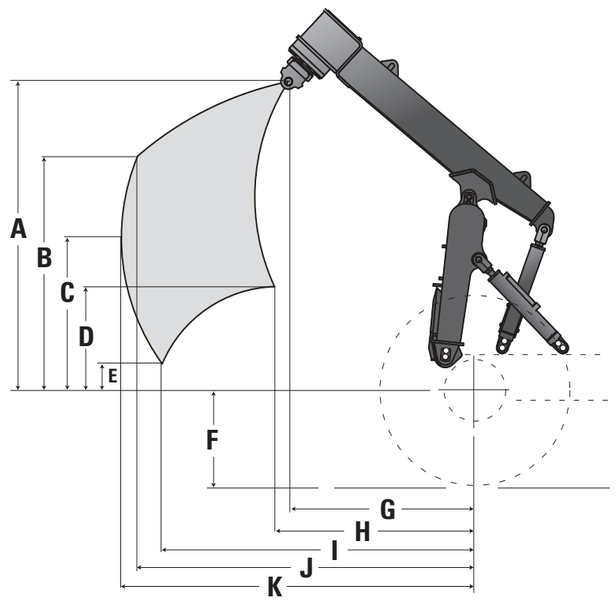

Dual Function

	Continuous Rotation
A Lift highest, retracted	2817 mm (111 in)
B Lift highest, farthest	2163 mm (85 in)
C Lift maximum reach	1443 mm (57 in)
D Lift lowest, retracted	1014 mm (40 in)
E Lift lowest, farthest	335 mm (13 in)
F Loaded tire radius*	843 mm (33 in)
G Reach highest, retracted	1653 mm (65 in)
H Reach lowest, retracted	1775 mm (70 in)
I Reach lowest, farthest	2762 mm (109 in)
J Reach highest, farthest	2978 mm (117 in)
K Reach maximum	3121 mm (123 in)

*With 30.5 x 32 tires

For more complete information on CAT products, dealer services, and industry solutions, visit us on the web at:
www.cat.com and at **www.forestpro.com**